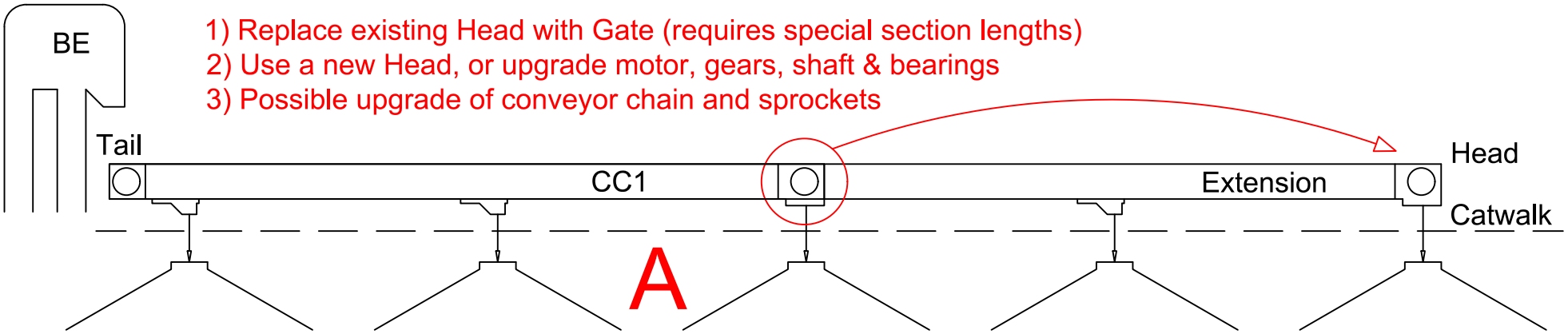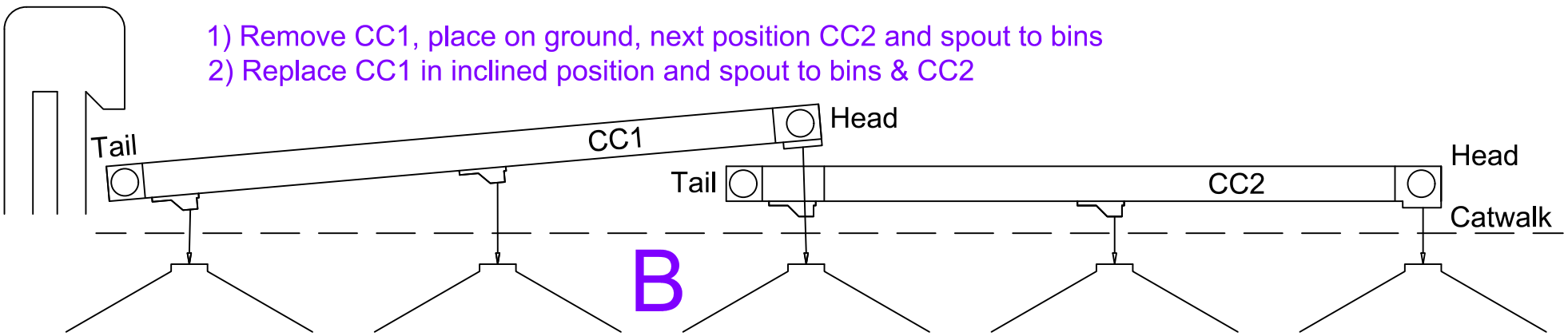TWO PROCEDURES TO EXTEND A CHAIN CONVEYOR: A or B